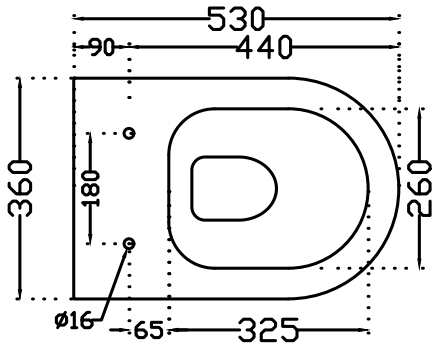

TOP VIEW

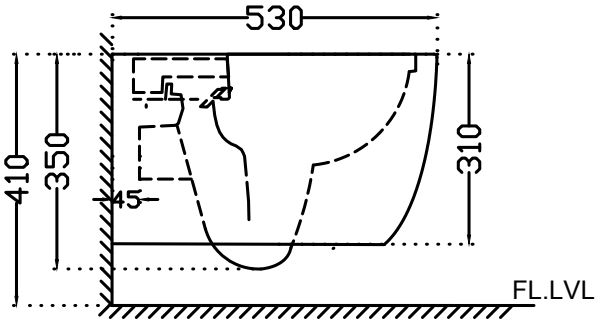

SIDE VIEW

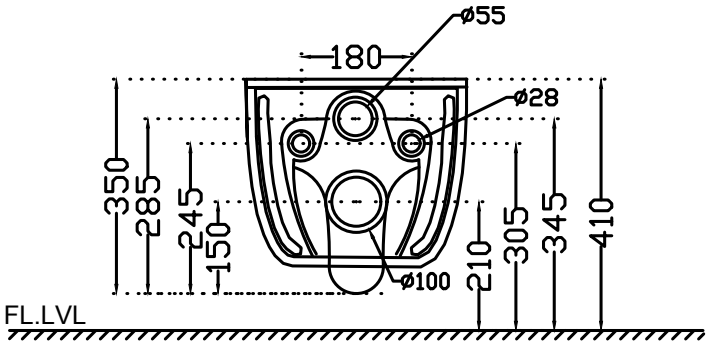

BACK VIEW

Artize	Jaquar Group Global Headquarters Plot No. 3, Sector– M–11, IMT Manesar Gurgaon, NCR – 122050, India E–mail : Sales: support@jaquar.com Customer Service : service@jaquar.com	ITEM CODE	SGS-WHT-41953NBIUF
		ITEM TYPE	WALL HUNG WC
		ITEM SIZE	360x530x350 mm
		ALL DIMENSIONS ARE IN MM. (TOLERANCE ± 5 MM)	